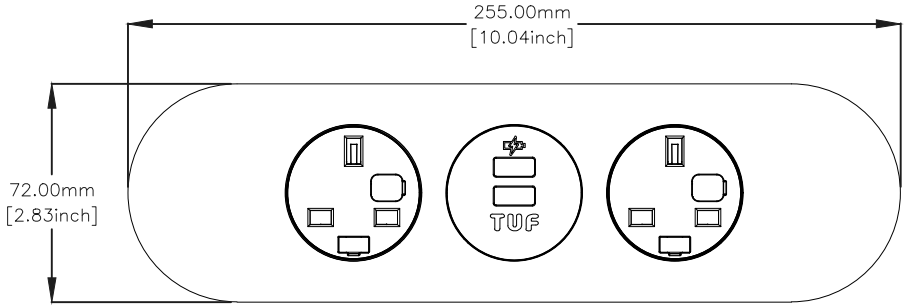

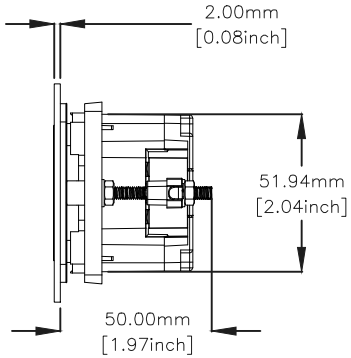

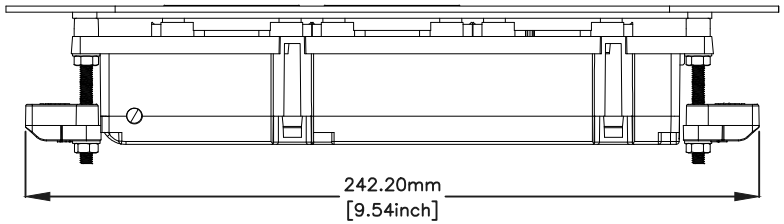

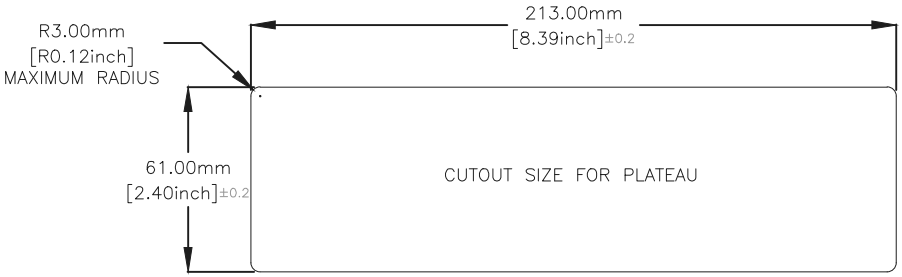

NOTES

Plateau fixing methods:
Clamped into cut-out:
Surface thicknesses 18mm (+/-0.1) to 32mm (+/-0.1)

POWER

Hardwired power entry
2 x UK sockets individually fused
1 x Twin USB Fast charger

COMMS

OTHER

CUSTOMER SIGNATURE:

CUSTOMER PRINT NAME:

DATE:

OE Electrics Limited
OE House,
Thomas Maddison Lane, Calder Park,
Wakefield, West Yorkshire, WF4 3GH, UK
TEL 44 0 1924 367255 FAX 44 0 1924 290652
www.oeelectrics.com

This drawing is the property of OE Electrics Limited and is protected by the Design Copyright Act. This drawing must not be copied or otherwise reproduced without the express written consent of OE Electrics.

Title
PLATEAU 2280

PART No.

ALL MEASUREMENTS ARE IN MILLIMETRES

SCALE:DO NOT SCALE | SHEET:1 OF 1

DRAWN:K.Mears | DATE:23/09/2022

CHECKED: | DATE:

COPYRIGHT © OE ELECTRICS

Drawing PUMA 2280